ERDC TN-DOER-I2
July 2000

Initial Corps Experience with Tons Dry Solids (TDS) Measurement

PURPOSE: This technical note describes the Tons Dry Solids (TDS) measurement method and summarizes the initial experiences of the U.S. Army Corps of Engineers with its use on Corps and contractor hopper dredges. Subsequent technical notes will describe further TDS measurement developments that evolve from these experiences.

BACKGROUND: In the Corps' dredging program, unit price construction contracting is the preferred method of accomplishing dredging work. With hopper dredges, the unit price can be based on volume, area, time, or bin measurements. The Instrumentation Focus Area of the Corps' Dredging Operations and Environmental Research (DOER) Program is currently investigating the applicability of the TDS bin measurement methodology for payment purposes. This methodology has been used in Europe since 1988 and was originally developed in The Netherlands for use in the Port of Rotterdam.

INTRODUCTION: TDS measures the volume and weight of the hopper load to determine the quantity of dry solids that the load contains. By applying the values for the dry solid specific density and in situ water density in a formula with the hopper load weight and volume (which indirectly measures the average density of the hopper load), the total quantity of the dry solids can be calculated.

TDS has promise for the Corps where dredging conditions render hydrographic surveys too inaccurate to determine work accomplished by the contractor. There are times and/or locations where hydrographic surveying cannot be used for payment purposes: on dynamic ocean entrance bars where the bottom changes quickly, or in fluid mud locations (naturally occurring fluff or sediment suspended from dredging activities) that affect echo sounding. In fluid mud, small changes in sensitivity (or signal gain) settings can result in large variations in the echo return point (depth) and no definitive methods exist to fully compensate for them (Headquarters, U.S. Army Corps of Engineers, 1994).

Because TDS measures the amount of dry solids material that is actually being transported, the performance of the dredge can be determined for contract management purposes, and TDS measurement provides feedback to the dredge crew and management for optimizing production. TDS also allows sediment removal to be described in terms of mass balance, improving the understanding of dredged material fate.

TDS Requirements. As stated earlier, the data requirements for computing TDS are as follows:

- Density of in situ water.
- Specific density of dry particles.

- Hopper volume.
- Vessel (hopper) weight.

So, to evaluate the TDS method, how well each of these data parameters can be measured needs to be determined. With the exception of hopper volume, each of these parameters is established in dredging practice and is part of the Corps' standard dredge reporting. In addition to determining TDS accuracy and repeatability, it is also important to compare its relative accuracy and repeatability to those of hydrographic surveys.

Important requirements associated with TDS are quality assurance (having methods to check the results), repeatability, and minimization of the labor and expense of obtaining, analyzing, and reporting the data. The technology to implement a TDS pay system is available, and the Corps is increasing its understanding of TDS.

TDS Theory. The following derivation of the TDS equation is based on Rullens (1993). Dredged material consists of both water and solid particles as illustrated in Figure 1, but the concept of TDS can be viewed as just the total mass of the dredged material minus that of the included water. Assume that Figure 1 contains 1 m^3 of dredged material with the solid particles surrounded by the water matrix.

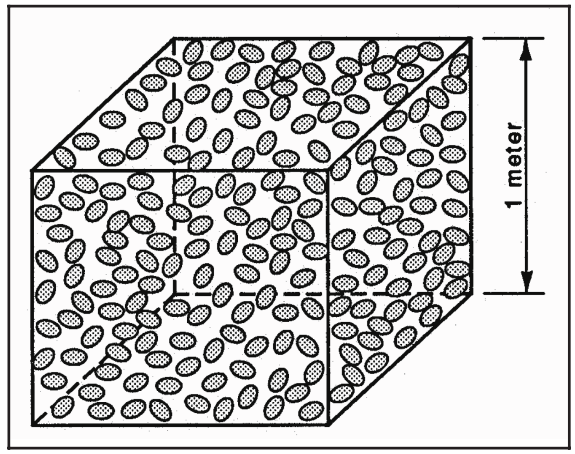

Figure 1. Visualization of 1 m^3 of dredged material

If the percentage of volume occupied by the solid particles is defined as the variable P, then the total mass of particles in the unit volume can be calculated by multiplying P times the specific density of the particles ρ_s. The remaining percentage of volume in the 1 m^3 is occupied by water and can be determined as 1 - P. The mass of this water then equals (1 - P) times the density of the water ρ_w, kg/m^3.

The total mass of the 1 m^3 of dredged material then equals

$$P\rho_s + (1 - P)\rho_w \tag{1}$$

So, with the value of the average density of the dredged material in the hopper ρ_h, kg/m^3, determined by this indirect measurement methodology

$$\rho_h = P\rho_s + (1 - P)\rho_w \tag{2}$$

or

$$P = \frac{\rho_h - \rho_w}{\rho_s - \rho_w} \tag{3}$$

When the values of the specific density of the dry particles and density of the in situ water are known from field surveys of the dredge site, then the mass of dry particles in the hopper with a load of dredged material with a measured volume V, m^3, can be calculated as follows:

TDS, or total mass of dry particles in hopper = $(P)(\rho_s)(V)$

$$= \frac{\rho_h - \rho_w}{\rho_s - \rho_w}(\rho_s)(V) \tag{4}$$

where TDS is given in tonnes dry solids (1 metric tonne equals 1,000 kg of mass).[1]

TDS Methodology. TDS involves the measurement of the volume and weight of the hopper load to determine its average density and the quantity of dry solids that it contains. The level of dredged material in the hopper is measured to derive the hopper load volume from the hopper ullage chart. The hopper level can be measured by level sensors mounted over the hopper (Rokosch 1989) as shown in Figure 2.

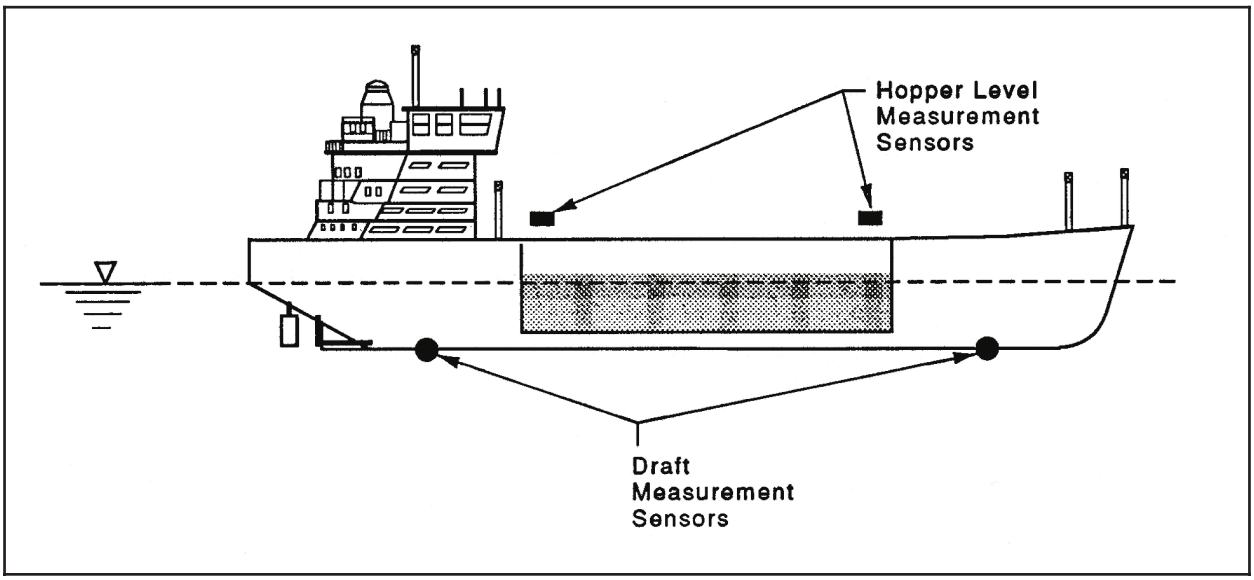

Figure 2. TDS sensor components

These hopper level sensors are usually ultrasonic transducers that emit acoustic waves and detect the energy reflected from the dredged material surface. Similar to a hydrographic survey, the distance between the transducer and the acoustic reflector is based on the time interval required for the acoustic energy to travel from the transducer, bounce off the hopper material, and then return to the transducer. The weight of the hopper load is determined by measuring the loaded and unloaded weights of the vessel, then subtracting the unloaded value from the loaded value to determine hopper weight. To accomplish this, the vessel change in draft is measured, and this measurement is converted into displacement from the curves of hydrostatic properties of the

1 In Corps TDS measurement, the metric tonne (mass) unit is converted into the long ton (weight) unit, 2,240 lb.

vessel form (displacement curves). Draft measurements are usually taken with at least two pressure sensors as shown in Figure 2, one mounted forward and one mounted aft on the underside of the vessel (Rokosch 1989). These sensors measure the pressures (proportional to depth) experienced at the underside hull locations.

EXPERIENCE WITH TDS

European Experience. The European TDS system (TDSS) was developed by the Dutch Ministry of Transport, Public Works and Water Management (Rijkswaterstaat) for maintenance dredging in navigation channels of the Port of Rotterdam. Its development was initiated to replace the bin measurement method called the half-sphere and centrifuge that had been used previously as a payment basis. This method involved lowering a half-sphere (designed to float in a material density of 1,200 kg/m^3) into the hopper at predetermined locations to determine the volume of material with a density over 1,200 kg/m^3. The additional hopper material above this measured interface was sampled halfway in the remaining dredged material column, and the percentage of solids volume was determined in a centrifuge. Although improved technology has allowed hopper dredges to dredge material with densities over 1,200 kg/m^3, this method of payment measurement did not provide the contractor with an incentive to dig anything over 1,200 kg/m^3 (van der Gouwe and Blok 1993). The TDSS determines, presents, and records the amount of TDS onboard the hopper dredge on a continuous basis and per dredging cycle. The data collection system comprises three elements: the dredge cycle data (including delays), the hopper load per dredge cycle, and positioning data in real time (van Oostrum and van Rijn 1989).

TDSS field trials were conducted from 1985 to 1987, and the first dredging contract using it as a payment basis was executed during the winter season 1988-1989 (Ottevanger and van Rijn 1992). The experiences with this prototype system proved that the TDDS was a reliable and accurate method for determining the amounts of dry solids dredged and transported (Rijkswaterstaat 1990). Since that first contract, the system has been used in Rotterdam as a payment basis and has been continuously modified to improve measurement accuracy and efficiency.[1] Measurement of the weight of solids in the hopper is one of the most effective methods for evaluating the amount of dredging work being done. TDSS has undergone lengthy testing aboard various types of trailing suction hopper dredges, and various studies (Rokosch 1989; Rullens 1993; Rullens, dAngremond, and Ottewwanger 1994; and van der Gouwe and Blok 1993) have found the following:

- TDSS requires no manual actions.
- TDSS is more precise than the half-ball and centrifuge method.
- TDSS is objective since it eliminated errors due to human fatigue caused by routine actions.
- TDSS becomes an incentive for the contractor to improve performance.
- The TDSS used in 1993 measures production to an accuracy of approximately 8 to 10 percent.

---

1 Personal Communication, 22 February 1999, Henk Keyser, Civil Engineer, Ministry of Transport, Public Works and Water Management (Rijkswaterstaat) North Sea Directorate, The Netherlands.

- TDS may encounter a problem with sandy material (mounding)in the hopper but is suitable in silty material.
- TDS was a fair and accurate measurement method for determining payable dredged quantities in areas of heavy erosion or siltation.
- Performance of hopper dredges operating in the Euro-channel, Maas-channel, and EuroPort entrance was improved and there had been a reduction in total capacity of dredges required.

Past Corps TDS Experience. An example of previous Corps experience with hopper dredge instrumentation and data collection, the Dredge Data Logging System (DDLS), is presented by Burke (1989) and McDonnell and Tillman (1992). The first DDLS was designed to monitor hopper dredge production and position data and, although it did not incorporate hopper level sensors (necessary for TDS determination), the system recorded vessel draft. Scott (1992) investigated the use of acoustic hopper level sensors and concluded that they "maintained their calibration throughout the two months of testing (and that) the data from the hopper sensors had good resolution, with minimal signal noise."

Jorgeson and Scott (1994) and Scott et al. (1995) describe an instrumentation package of acoustic and pressure sensors to monitor real-time dredge displacement and hopper volume and indirectly measure the density or TDS value of the dredged material in the hopper. This package was designed, fabricated, tested, and evaluated for effectiveness in providing data to dredge personnel for the purpose of increasing dredge efficiency. "The results indicate that sufficient knowledge and technology existed for developing a comprehensive hopper dredge monitoring system" (Scott et al. 1995).

Alexander, Murphy, and Scott (1996) developed DDLS specifications and quality assurance tests for hydraulic pipeline dredges, hopper dredges (incorporating draft and hopper level sensors), and mechanical dredges and scows (with draft and bin level sensors) for the Oakland Harbor Deepening Project in the U.S. Army Engineer District, San Francisco. The project was accomplished with mechanical dredges with scows and the scow draft and bin-level sensors were used to calculate dredged material density. A conclusion from this dredging contract was that "DDLS methods provide a fair and accurate assessment of project activities for both the dredging project sponsors and contractors" (Alexander, Murphy, and Scott 1996). Cox, Maresca, and Rosati (1996) present the Silent Inspector (SI) system technical manual developed during the Dredging Research Program (DRP). TDS data was collected on the Corps dredge *Essayons* under this program.

The design of the Corps instrumentation and data collection system, specifications for contractors, and quality assurance procedures were built upon the aggregate knowledge from various sources that include these past Corps experiences, Corps dredging management and inspection expertise, and European and Asian experiences and documentation.

RECENT DOER TDS STUDIES: The Corps dredge *McFarland* and B+B Dredging Company dredge *Columbus* have been instrumented to collect TDS data in different geographical and geological locations. The DOER work unit has installed TDS instrumentation on the *McFarland*, while the TDS system on the *Columbus* is required in a rental contract with the U.S. Army Engineer District, Mobile.

Dredge *McFarland*. The dredge *McFarland* (Figure 3) is a Corps dredge built in 1967 with a rated capacity of 2,400 m^3 (3,140 yd^3) that is operated by the U.S. Army Engineer District, Philadelphia. Instrumentation was installed 28 August 1999 on the *McFarland* to monitor and collect hopper volume and vessel displacement data necessary to calculate TDS values.

Figure 3. Corps dredge *McFarland*

Dredge *Columbus*. The *Columbus* (Figure 4), owned and operated by B+B Dredging Company, is a hopper dredge with a rated capacity of 3,361m^3 (4,397 yd^3). Since January 1998, this dredge has worked for the Mobile District under rental contracts that specified not only ullage, draft, and position measurement, but also the full suite of data parameters required for the SI hopper dredge monitoring system. In addition to collecting TDS data, the SI (Rosati 1998) also incorporates contract assurance requirements and is an analysis and reporting system to assist in the inspection of contract dredging operations.

SENSORS

Hopper Level Sensors. Ultrasonic sensors were selected as the first type of measurement technology to be investigated on the *McFarland*. Two ultrasonic ullage sensors (LUNDAHL DCU-1104s) were installed over the hopper to measure the level of dredged material. The forward sensor is pictured in Figure 5. Ullage (pronounced ‘əl-ij), as defined in Webster’s (1983) dictionary, is the amount that a container such as a cask or tank lacks being full. This ultrasonic sensor measures the distance between sensor and dredged material by using a piezoelectric transducer to send out cone-shaped sound waves in a series of pulses. These pulses reflect off the top of the hopper material (slurry or water) and echo back to the transducer. The distance between the dredged material surface and the transducer is calculated by the sensor from the time interval between the pulse transmission and echo reception.

Figure 4. B+B dredge *Columbus*

Figure 5. Forward ullage sensor

The ullage sensors were mounted over the hopper and as close to the vessel center line as possible, with one located forward and one aft. Specified accuracy of this sensor is 0.25 percent of range with no temperature gradient. Because the speed of sound in air changes with air temperature variation, the sensor compensates for temperature changes. Calibration of the ullage sensors is confirmed by manually measuring the distance from the hopper ullage datum down to the dredged material surface and comparing these values with the sensor/computer-calculated ullage value (which incorporates the sensor offset elevation). The *Columbus* has ullage sensors that work in a similar fashion but use pulsed radar waves instead.

Draft Sensors. The sensor that measures the *McFarland*'s draft is a strain gauge-type pressure transducer (draft transducer) that was integrated into the existing pneumatic "bubbler" system used to measure draft (Figure 6). The *McFarland* uses a single bubbler line that runs from the keel (located near the center of the vessel and hopper area) up to the bridge and operates by maintaining a constant low flow of air in the line that purges or "bubbles" out the line at the keel. The dredge *Columbus* has fore and aft draft sensors that measure pressure as well. The draft transducer calibration is confirmed by comparing sensor/computer-generated draft output with visual sightings of the hull draft markings of the vessel.

DATA COLLECTION AND ANALYSIS

***Columbus* Data Collection and Analysis System.** The SI for hopper dredges is a system that monitors dredge position and dredge state, computes TDS, and reports and manages the data

for Corps dredging contracts (Rosati 1998). The SI system collects and records measurements from shipboard sensors, calculates the dredging activities, and displays this information using standard reports and graphical displays. In addition to automatically calculating TDS, the SI also collects three-dimensional positioning of the drag head(s) and horizontal coordinates of disposal, parameters that are desirable for any automated bin payment method used by to the Corps to ensure that dredging and disposal are conducted within the authorized locations. The inspector screen on the Corps computer that displays dredging information in near real-time is shown in Figure 7. Recorded data are also automatically backed up, and later archived to allow transfer of the data to other locations. The

Figure 6. Draft transducer installed in the bubbler line

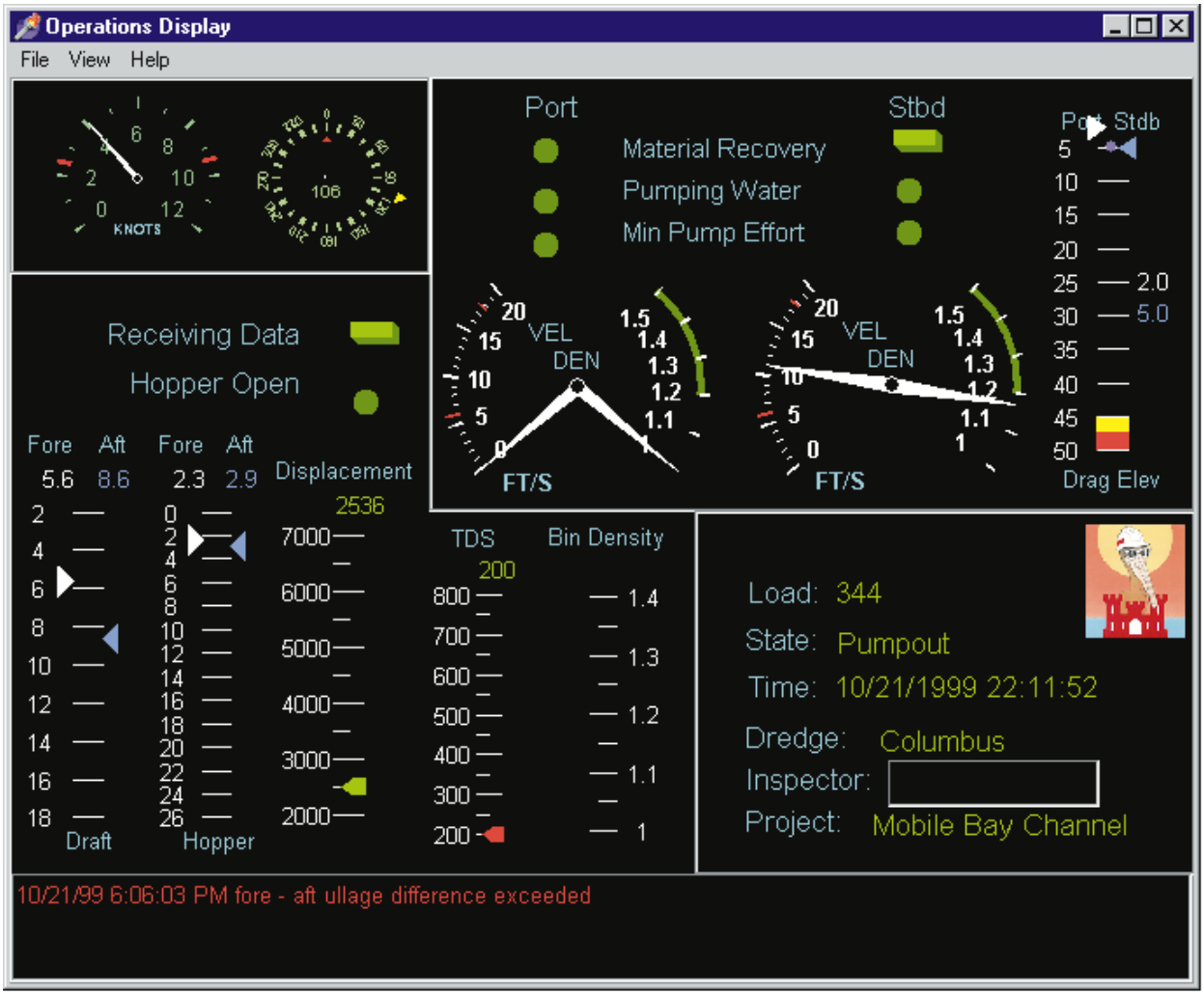

Figure 7. SI inspector screen

system consists of sensors connected to two primary data collection components: a Dredge-Specific Software (DSS) component, and a ship-based component (Ship Server). The DSS, Ship Server, and all shipboard sensors are the property of the contractor, who is also required to maintain them.

The Corps SI software resides on the Ship Server. The DSS collects sensor data, checks these data against acceptable ranges, computes status of the dredging pumps (on/off) and other equipment, attaches the name of the project and dredge and contract number to the sensor data, and inserts data into the central database of the system. The Ship Server maintains a central database for the system, accepting data in near real-time from the DSS using Corps software. The Ship Server then reviews the data, computes present dredging activity being performed (dredging, turning, sailing full, disposing, sailing empty, down, pumpout) and the amount of material recovered, and produces reports (trip, daily, job) and graphical displays of the data.

The Instrumentation Focus Area is modifying the SI system from its original format (as developed under the Dredging Research Program) to incorporate various quality assurance procedures, sensor outputs, and site-specific parameter input (i.e., solids specific density, in situ water density, etc.) associated with TDS. Figure 8 is an example of the draft and hopper level time-series of the *Columbus*.

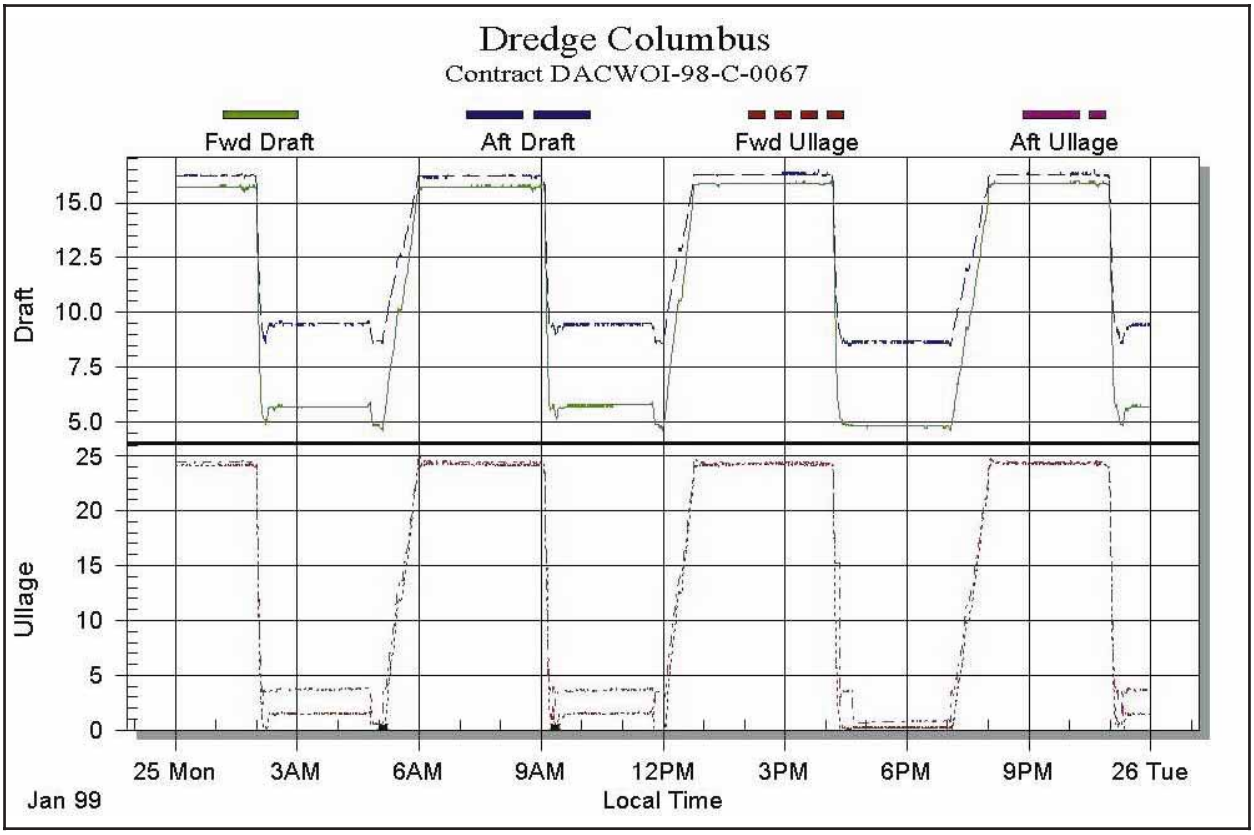

Figure 8. SI-generated draft and hopper level time-series

***McFarland* Data Collection.** A Pentium class personal computer installed on the *McFarland*'s bridge collects and displays the forward and aft ullage measurements, draft measurement, vessel

displacement, hopper volume, and location coordinates provided by a Global Positioning System. These data are stored for later analysis.

Hopper Volume and Draft Determination. Volume of material in the hopper is calculated by averaging the forward and aft ullage measurements and applying this value to an equation fitted to the ullage table values. A time-series plot of the hopper volume for the *McFarland* is shown in Figure 9. The hopper volume variability during loading on this plot is explained by the fact that the aft hopper level sensor reading is affected by inflow from the hopper distribution system. Sometimes when dredging in noncohesive material, the bin water will not completely cover the sediment load due to mounding above the water plane. Although the ullage sensors work as intended, the level they report may not be indicative of the average surface level of the load, introducing error into the volume calculation. This type of error is being investigated on the *McFarland*, which often works in noncohesive material.

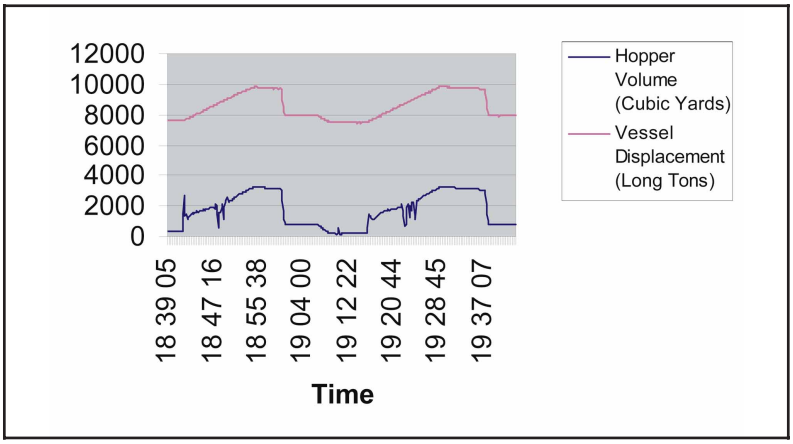

Figure 9. *McFarland* displacement and hopper volume time-series plot

Weight of the hopper material is determined by subtracting the unloaded vessel weight (including the weight of residual water in the hopper) from the loaded vessel weight. These vessel weights, or vessel displacement tonnages (weight of the water volume displaced by the hull), are calculated by applying draft measurements to the vessel curves of form. These curves equate vessel draft to displacement tonnage (time-series plot shown in Figure 9).

TDS QUALITY ASSURANCE TESTS: Quality assurance tests are tests that are conducted to verify the accuracy and/or consistency of sensor or algorithm outputs.

Ullage Measurements. To date, ultrasonic and radar ullage measurements have compared well with manual tape measurements when the surface of the hopper material consists of just slurry or water. However, when foam has been encountered on the hopper material surface, the acoustic or radar pulse is reflected off of the bubble interface instead of the dredged material surface. The amount of error introduced into the ullage measurement depends on the thickness of the foam.

Water Tests. One of the TDS quality assurance tests being conducted on the *McFarland* and *Columbus* consists of filling the hopper with water (water test) to use the TDS instrumentation to calculate the average specific gravity of the water therein and compare it to an average value determined from samples that are taken from the hopper and analyzed. Water samples retrieved from the hopper at various locations and depths are being measured with a temperature-compensated hand refractometer capable of measuring specific gravity to an accuracy of 0.001. The sensor-measured hopper material specific gravity is calculated by dividing the hopper volume by its weight,

and then this quotient is divided by the unit weight of fresh water. Three water tests conducted during system installation on the *McFarland* gave an average difference of 1.23 percent between these two specific gravities. This average percent difference is higher than the value reported by Scott et al. (1995) (1.1 percent difference), but the decreased accuracy may be attributed to the error introduced by the use of only one amidship draft sensor on the *McFarland*, as opposed to the two draft sensors used in the study by Scott et al. (one at the forward perpendicular and one at the aft perpendicular). Water tests show an average percent difference of 0.85 percent between sensor-measured and hopper water samples for the dredge *Columbus*.

In an ideal water test, the TDS value should be zero due to the absence of solid particles. Using a sand specific density of particles value of 2,650 kg/m^3 (specific gravity of 2.65) and water density of 1,025 kg/m^3 (specific gravity of 1.025), the calculated TDS values of the *McFarland* water tests range from approximately –50 LT to +28 LT, with an average value of –16 LT (a cubic yard of dry sand weighs approximately 1.2 long tons).

Trim-Trim. Trim-Trim is based on the fact that the surface of a static fluid is always horizontal. The measurement of the fluid surface in the hopper by the acoustic sensors and the difference in displacement by the draft sensors allows two independent inclination angles to be calculated (Figure 10). If the respective sensors are functioning correctly, subtraction of these two angles should ideally equal zero. In Figure 10, the top illustration shows a vessel with trim on an even keel fore and aft where both inclination angles are equal to zero. The bottom illustration shows the same vessel trimmed down by the stern and identifies the two nonzero inclination angles. The European TDSS specifies a maximum allowable Trim-Trim angle difference of 0.3 deg. The Trim-Trim tests of the *Columbus* have successfully met that criterion.

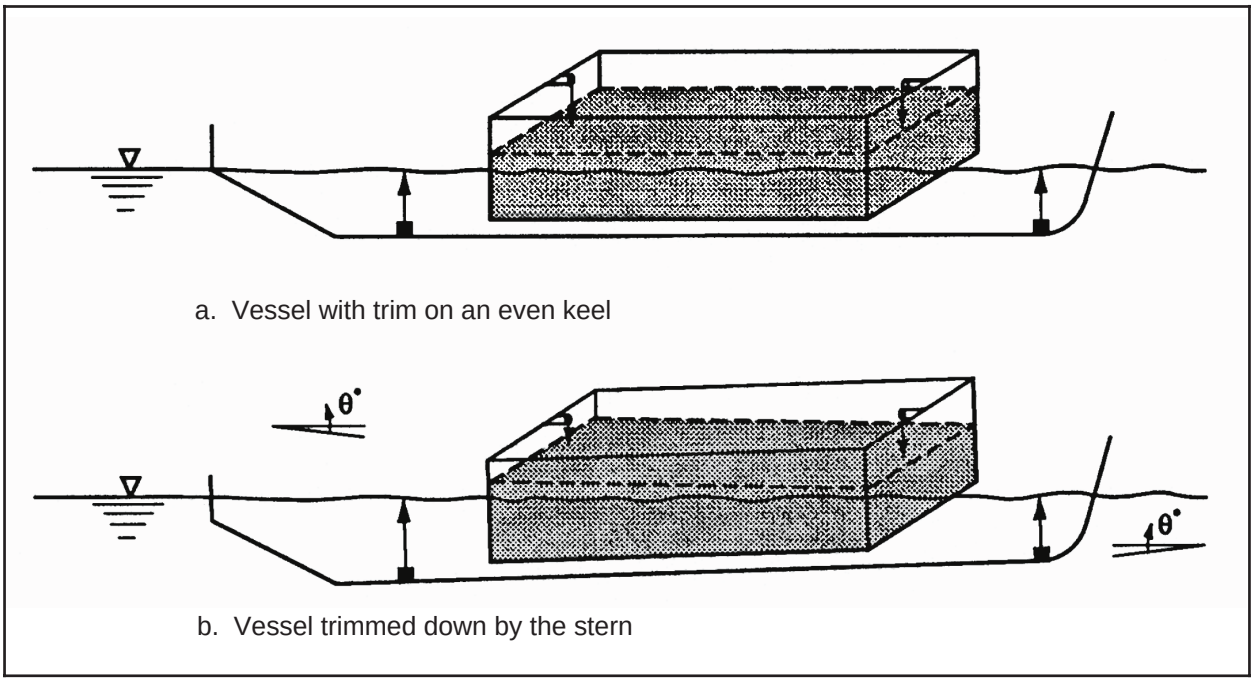

Figure 10. Trim-Trim

Water Level Test. The fixed distance between the draft and ullage sensors allows a quality assurance test to be conducted on hopper dredges with bottom dump doors. With the bottom dump doors open, the water level inside the hopper will equal that of the water surrounding the vessel. As shown in Figure 11, addition of the draft and ullage measurements should equal the fixed distance between the draft and hopper level sensors. Although the *Columbus* does not have dump doors, its discharge system allows the hopper water elevation to equalize with the surrounding water in the same manner. On the *Columbus*, these ullage and draft sensors have agreed within 30.5 mm (0.1 ft). Results on the *McFarland* as well as the *Columbus* are currently being analyzed to determine the effect of sensor geometries on relative accuracies.

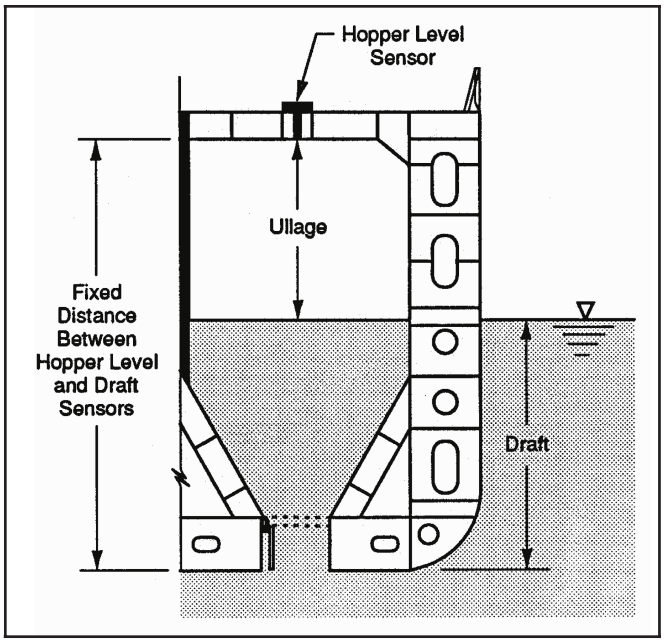

Figure 11. Fixed distance between draft and hopper level sensors

ONGOING INVESTIGATIONS

Dry Sediment Density and Water Density. Sediment and water samples in the Mobile Channel are currently being collected and analyzed to generate a database of specific density variability for solids and in situ water. As this database is made more complete in conjunction with more TDS measurements, analyses will be conducted to investigate such TDS issues as when and how (e.g., time averaging) is the "best" way to measure the hopper load TDS value and the conditions under which TDS is most justified for a dredging project.

System Performance. Sensor and TDS system performance on the *McFarland* will be monitored during the course of regular dredging projects, and data collected will be analyzed with regard to accuracy and precision and quality assurance aspects. Nearly a year of TDS data have been collected on the *Columbus* and the contract-specified 90 percent data return has been exceeded. The ullage sensors have had several failures, but they have been repaired within the 48-hr time window specified in the contract.

CONTRACT SPECIFICATIONS: The Mobile District rental contract for the dredge Columbus includes specifications that aid in implementing TDS and the SI system. For instance, the contractor must develop a Dredge Plant Instrumentation Plan that shows how sensor data will be gathered, quality control will be performed on those data, and calibration and repair of sensors/data reporting equipment will be conducted when they fail. A standard interface is specified for connecting sensor data and computed dredge-specific data to the ship server. The contractor is to keep a log of sensor problems and repairs. Recalibration can be directed at any time during contract execution as deemed necessary. No recalibration or adjustments to the calibration controls are to be performed in the absence of the Authorized Representative of the Contracting Officer without prior written approval.

Physical documentation of the calibration procedures and corresponding printed verification data are required for every calibration event.

SUMMARY: A DOER Program work unit is currently investigating the applicability of TDS measurement for Corps dredge contract payment purposes. TDS determines the amount of dry solids in the hopper. It was originally developed in The Netherlands where its use in silty material has been determined to be a basis for fair and accurate measurement of payable dredged quantities. It has also provided an incentive for the contractor to improve performance.

The work unit is presently focused on collecting the data for calculating TDS and establishing the accuracy and reliability of those calculations. Items receiving special attention include the following:

- Instrumentation and equipment requirements.
- Minimum accuracy requirements.
- Quality assurance and control procedures.
- TDS data acquisition and database management within the SI system.

In the future, the focus will shift to analyzing the TDS database and investigating the use of TDS for various geotechnical and hydrodynamic settings.

In order for TDS to be successfully implemented, the dry ton (as a payment unit) and the manner in which it is determined must be understood by and agreeable to both contract parties. Corps and contractor understanding of TDS as a payment method will increase as more TDS data are collected, allowing better correlations between TDS and dredging costs and project volumes. Because TDS is a method that measures in conveyance, its data can also be used for contract management, production feedback, and mass balance purposes.

POINTS OF CONTACT: For additional information on TDS measurement or the Silent Inspector System, contact the authors of this technical note, Mr. James Rosati (601-624-2022, *rosatij@wes.army.mil*) and Mr. Timothy Welp (601-634-2083, *welpt@wes.army.mil*) or the Program Manager of the Dredging Operations and Environmental Research Pogram, Dr. Robert M. Engler (601-634-3624, *englerr@wes.army.mil*). This technical note should be cited as follows:

> Welp, T. L., and Rosati, J., III. (2000). "Initial Corps experience with Tons Dry Solid (TDS) measurement," *DOER Technical Notes Collection* (ERDC TN-DOER-I2), U.S. Army Engineer Research and Development Center, Vicksburg, MS. *www.wes.army.mil/el/dots/doer*

REFERENCES

Alexander, M., Murphy, M., and Scott, S. (1996). "Innovative dredging operations monitoring for the Oakland Deepening Project." *Proceedings of the Western Dredging Association Seventeenth Technical Conference and Twenty-Ninth Annual Texas A&M Dredging Seminar*, New Orleans, June 11-14, 1996, 253-270.

Burke, L. (1989). "Logging system developed to monitor hopper dredges," *International Dredging Review* November/December, 8-9.

Cox, J. M., Maresca, P., and Rosati, J. (1996). "Silent Inspector technical manual," Technical Report DRP-96-1, U.S. Army Engineer Waterways Experiment Station, Vicksburg, MS.

Headquarters, U.S. Army Corps of Engineers. (1994). "Hydrographic surveying," Engineer Manual 1110-2-1003, Washington, DC.

Jorgeson, J. D., and Scott, H. L. (1994). "An automated system for hopper dredge monitoring," Technical Report HL-94-12, U.S. Army Engineer Waterways Experiment Station, Vicksburg, MS.

McDonnell, T. M., and Tillman, R. K. (1992). "Dredge data-logging system; A prelude to the Silent Inspector," Dredging Research Program Information Exchange Bulletin DRP-92-2, U.S. Army Engineer Waterways Experiment Station, Vicksburg, MS.

Merriam-Webster. (1983). *Webster's ninth new collegiate dictionary*. Merriam-Webster Inc., Springfield, MA.

Ottevanger, G., and van Rijn, M. J. (1992). "The Tonnes Dry Solids System (T.D.S. System) a reliable means of remuneration." *Proceedings of the XIIIth World Dredging Congess 1992*, Bombay, India, 7-10 April 1992, 577-594.

Rijkswaterstaat (Ministry of Transport, Public Works and Water Management). (1990). "Tonnes Dry Solids System," North Sea Directorate, The Netherlands.

Rokosch, W. D. (1989). "Measuring dry matter in trailing hopper dredges," *Terra et Aqua* 41, 13-20.

Rosati, J , (1998). "The Silent Inspector system," *Proceedings of the 15th World Dredging Congress*, Las Vegas, June 29-July 2, 1998. World Organization of Dredging Associations, 93-104.

Rullens, R. C. (1993). "Production measurement methods for trailing suction hopper dredges," Thesis, Faculteit der Civiele Techniek, Delft University of Technology, The Netherlands.

Rullens, R. C., dAngremond, K., and Ottevanger, G. (1994). "Tonnes Dry Solids reviewed," *Dredging 94, Proceedings of the Second International Conference on Dredging and Dredged Material Placement*, Lake Buena Vista, FL, November 13-16, 1994. American Society of Civil Engineers, New York, 673-682.

Scott, S. H. (1992). "Applying ultrasonic surface detectors to hopper dredge production monitoring," Dredging Research Technical Notes, Vol DRP-3-06, U.S. Army Engineer Waterways Experiment Station, Vicksburg, MS.

Scott, S. H., Jorgeson, J. D., Savage, M. B., and Cox, C. B. (1995). "Technologies for hopper dredge production monitoring," Technical Report HL-94-12, U.S. Army Engineer Waterways Experiment Station, Vicksburg, MS.

Van der Gouwe, J., and Blok, M.'t Hart en I. (1993). "Results and effects of the introduction of the Tonnes Dry Solids System on the efficiency of maintenance dredging." *Proceedings of the CEDA Dredging Days 1993*, Amsterdam, The Netherlands, 1-13.

Van Oostrum, R. W., and van Rijn, M. J. (1989). "Automated monitoring of dredging projects," *Terra et Aqua* 41, 21-27.

NOTE: *The contents of this technical note are not to be used for advertising, publication, or promotional purposes. Citation of trade names does not constitute an official endorsement or approval of the use of such products.*